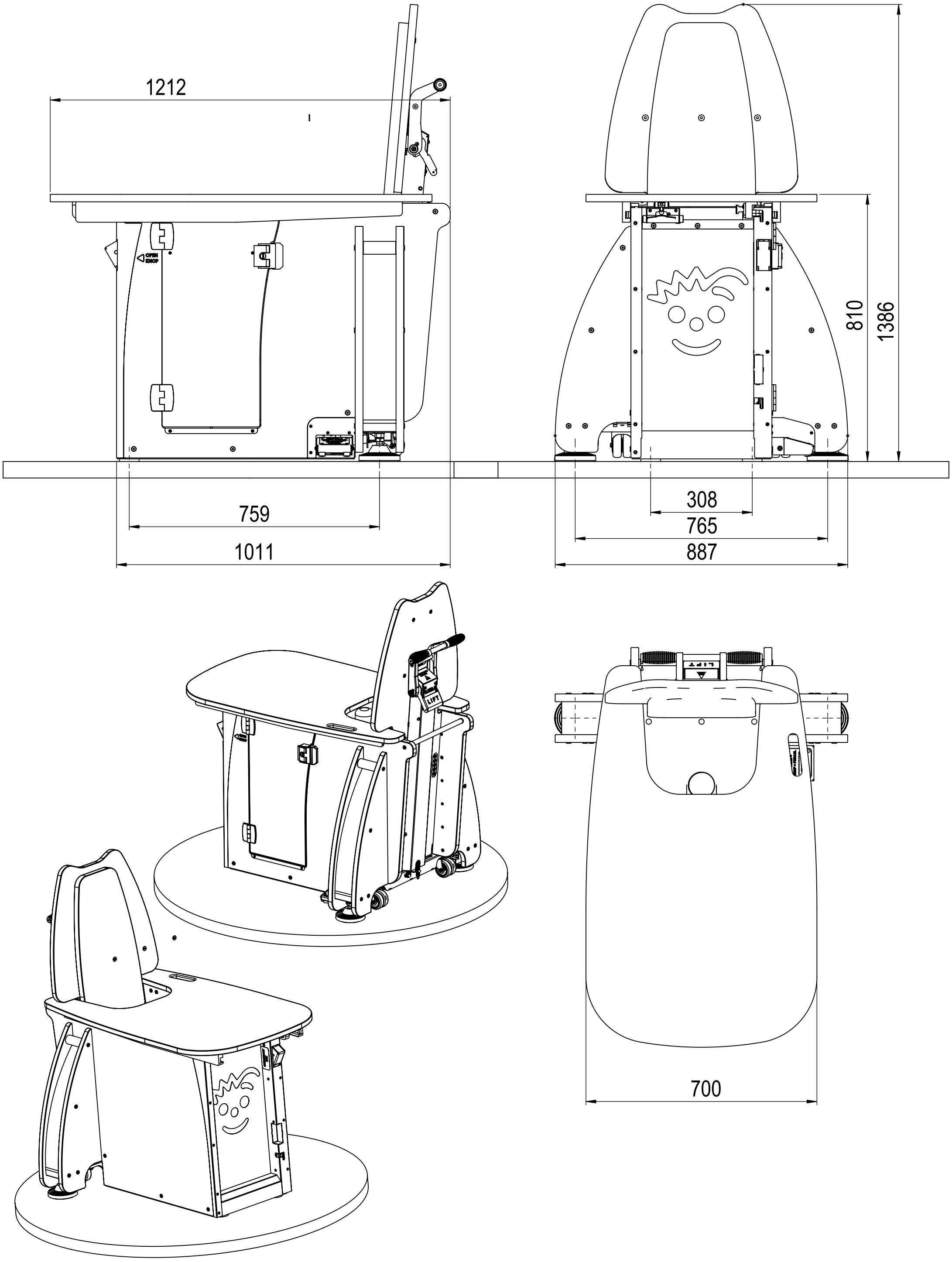
1212
OPEN
KNOP
759
1011
810
1386
308
765
887
LIFT
700